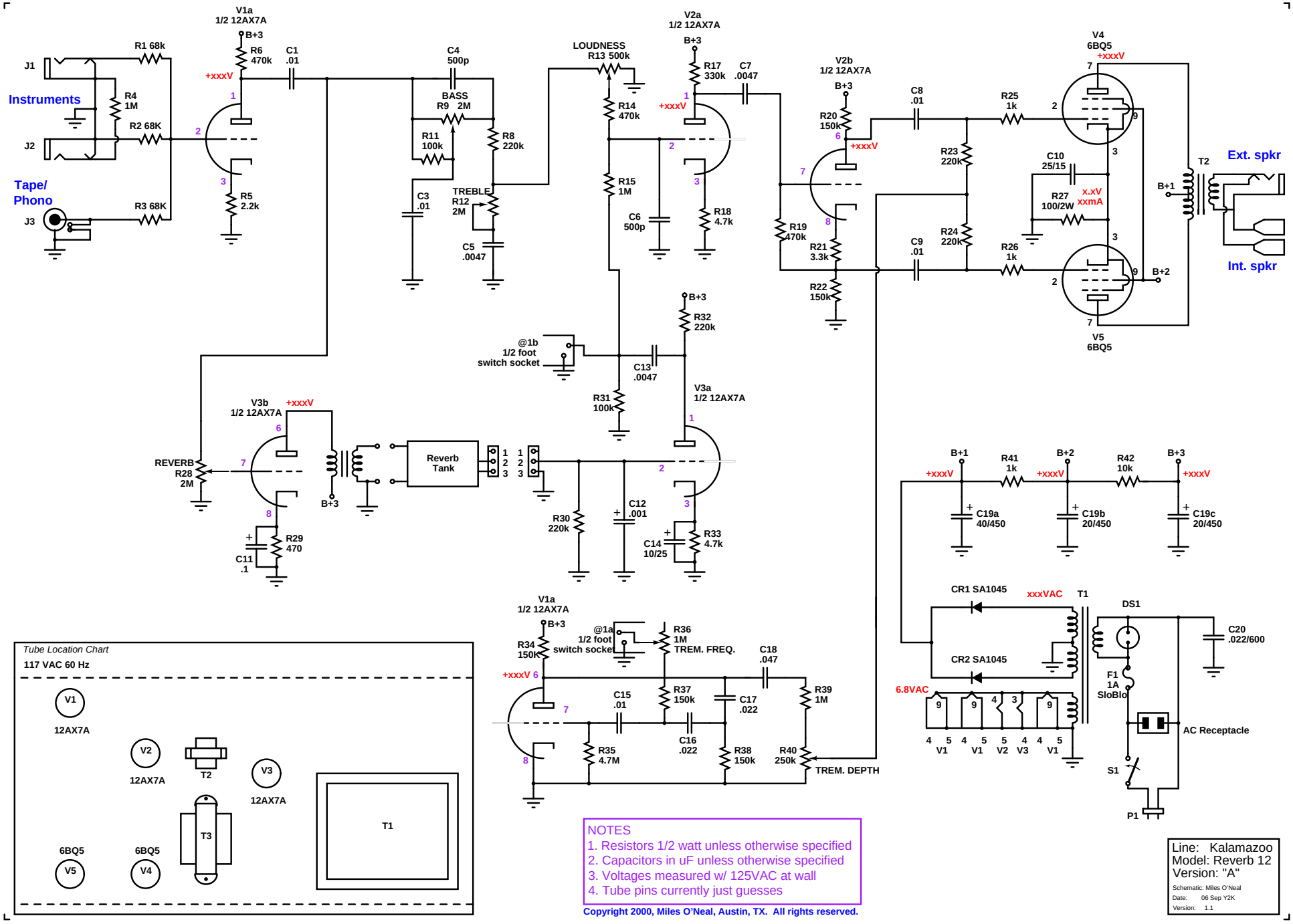
V1a
1/2 12AX7A
B+3
R6
470k
C1
.01
R1 68k
J1
Instruments
R4
1M
R2 68K
J2
Tape/
Phono
J3
R3 68K
+xxxV
R5
2.2k
C4
500p
BASS
R9 2M
R11
100k
R8
220k
C3
.01
TREBLE
R12
2M
C5
.0047
LOUDNESS
R13 500k
R14
470k
R15
1M
C6
500p
V2a
1/2 12AX7A
R17
330k
C7
.0047
R18
4.7k
V2b
1/2 12AX7A
R20
150k
C8
.01
R23
220k
R19
470k
R21
3.3k
R22
150k
C9
.01
R24
220k
R25
1k
R26
1k
C10
25/15
R27
100/2W
x.xV
xxmA
V4
6BQ5
V5
6BQ5
T2
B+1
B+2
Ext. spkr
Int. spkr
B+3
R32
220k
@1b
1/2 foot
switch socket
C13
.0047
R31
100k
V3a
1/2 12AX7A
V3b
1/2 12AX7A
REVERB
R28
2M
Reverb
Tank
R29
470
C11
.1
R30
220k
C12
.001
C14
10/25
R33
4.7k
B+1
R41
1k
B+2
R42
10k
B+3
C19a
40/450
C19b
20/450
C19c
20/450
CR1 SA1045
CR2 SA1045
xxxVAC
T1
DS1
C20
.022/600
6.8VAC
F1
1A
SloBlo
AC Receptacle
S1
P1
V1a
1/2 12AX7A
R34
150K
@1a
1/2 foot
switch socket
R36
1M
TREM. FREQ.
C18
.047
R37
150k
C15
.01
C17
.022
R39
1M
C16
.022
R35
4.7M
R38
150k
R40
250k
TREM. DEPTH
Tube Location Chart
117 VAC 60 Hz
V1
12AX7A
V2
12AX7A
T2
V3
12AX7A
T3
T1
6BQ5
V5
6BQ5
V4
NOTES
1. Resistors 1/2 watt unless otherwise specified
2. Capacitors in uF unless otherwise specified
3. Voltages measured w/ 125VAC at wall
4. Tube pins currently just guesses
Copyright 2000, Miles O'Neal, Austin, TX. All rights reserved.
Line: Kalamazoo
Model: Reverb 12
Version: "A"
Schematic: Miles O'Neal
Date: 06 Sep Y2K
Version: 1.1