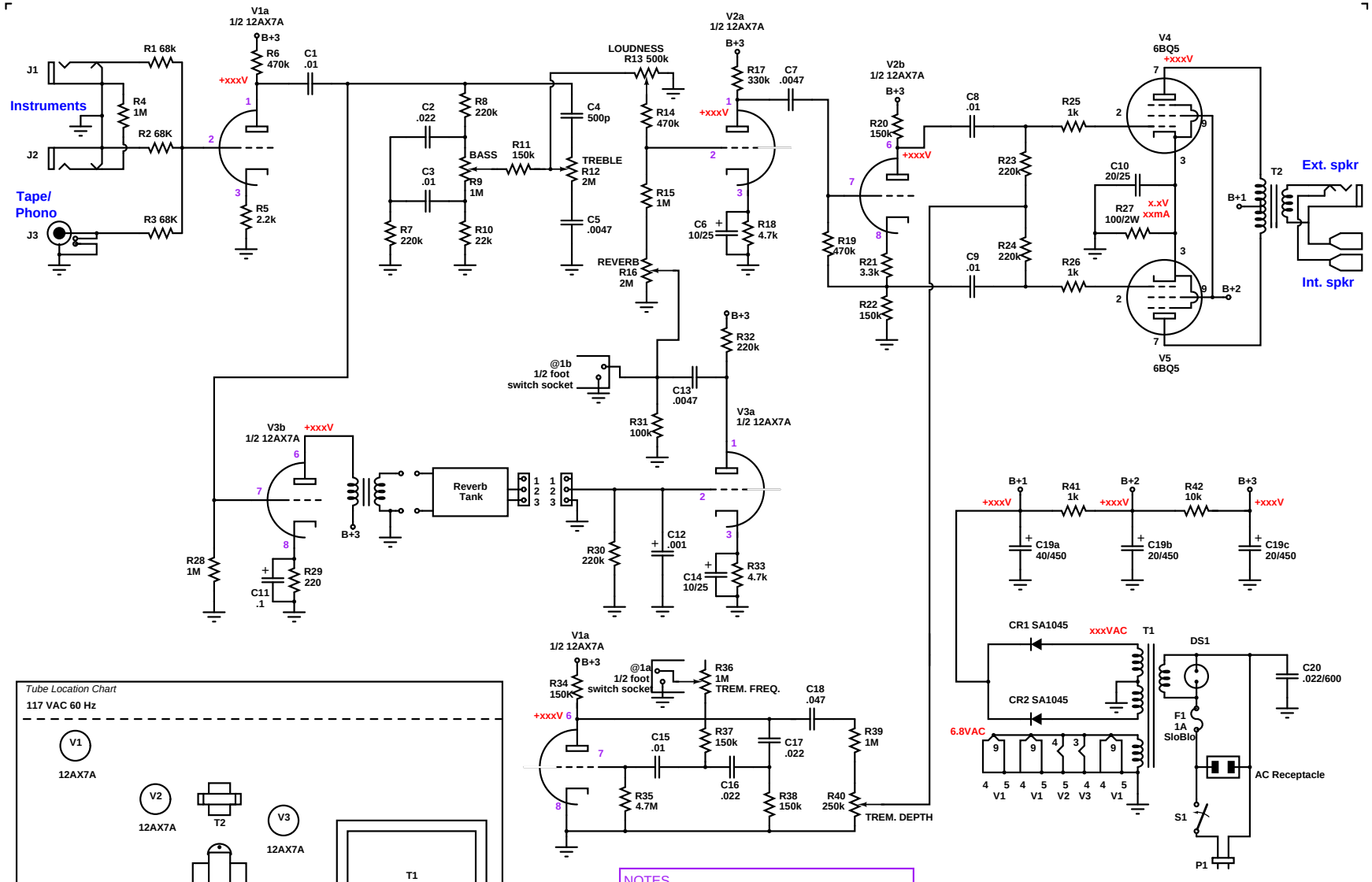

NOTES
1. Resistors 1/2 watt unless otherwise specified
2. Capacitors in uF unless otherwise specified
3. Voltages measured w/ 125VAC at wall
4. Tube pins currently just guesses

Copyright 2000, Miles O'Neal, Austin, TX. All rights reserved.

Line: Kalamazoo
Model: Reverb 12
Version: "A"

Schematic: Miles O'Neal
Date: 06 Sep Y2K
Version: 1.1