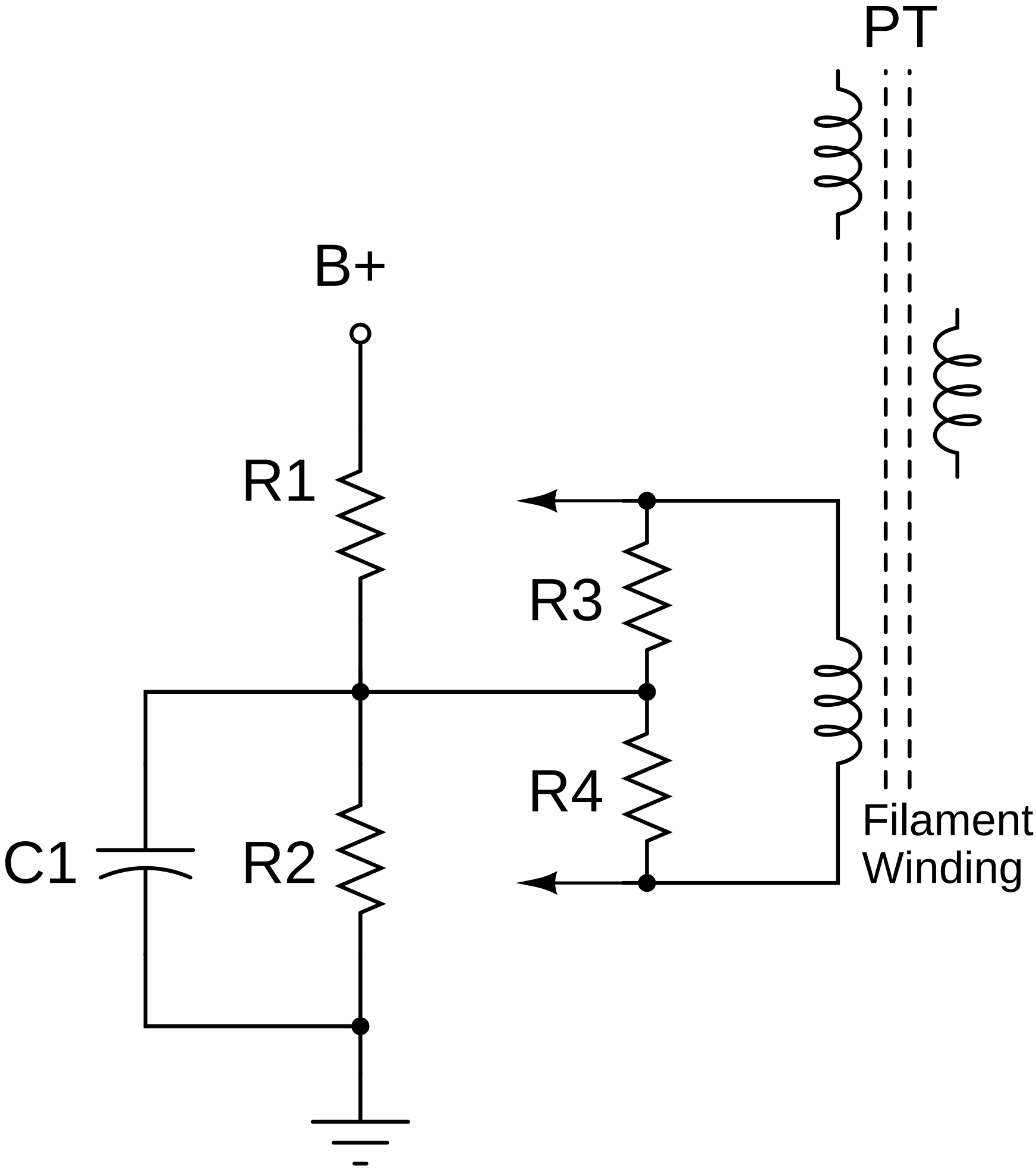
PT
B+
R1
R3
R4
C1
R2
Filament
Winding