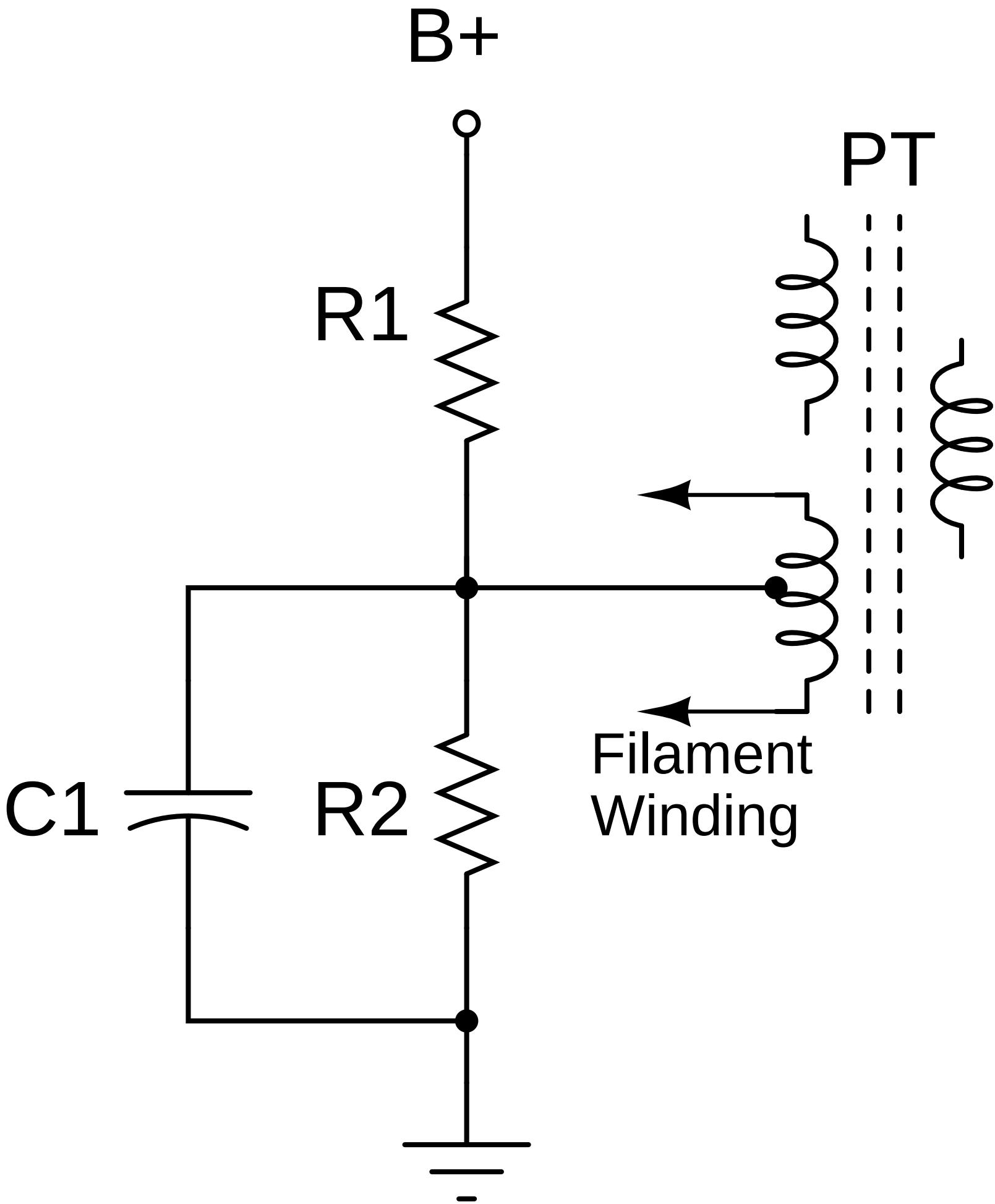
B+
PT
R1
C1
R2
Filament
Winding