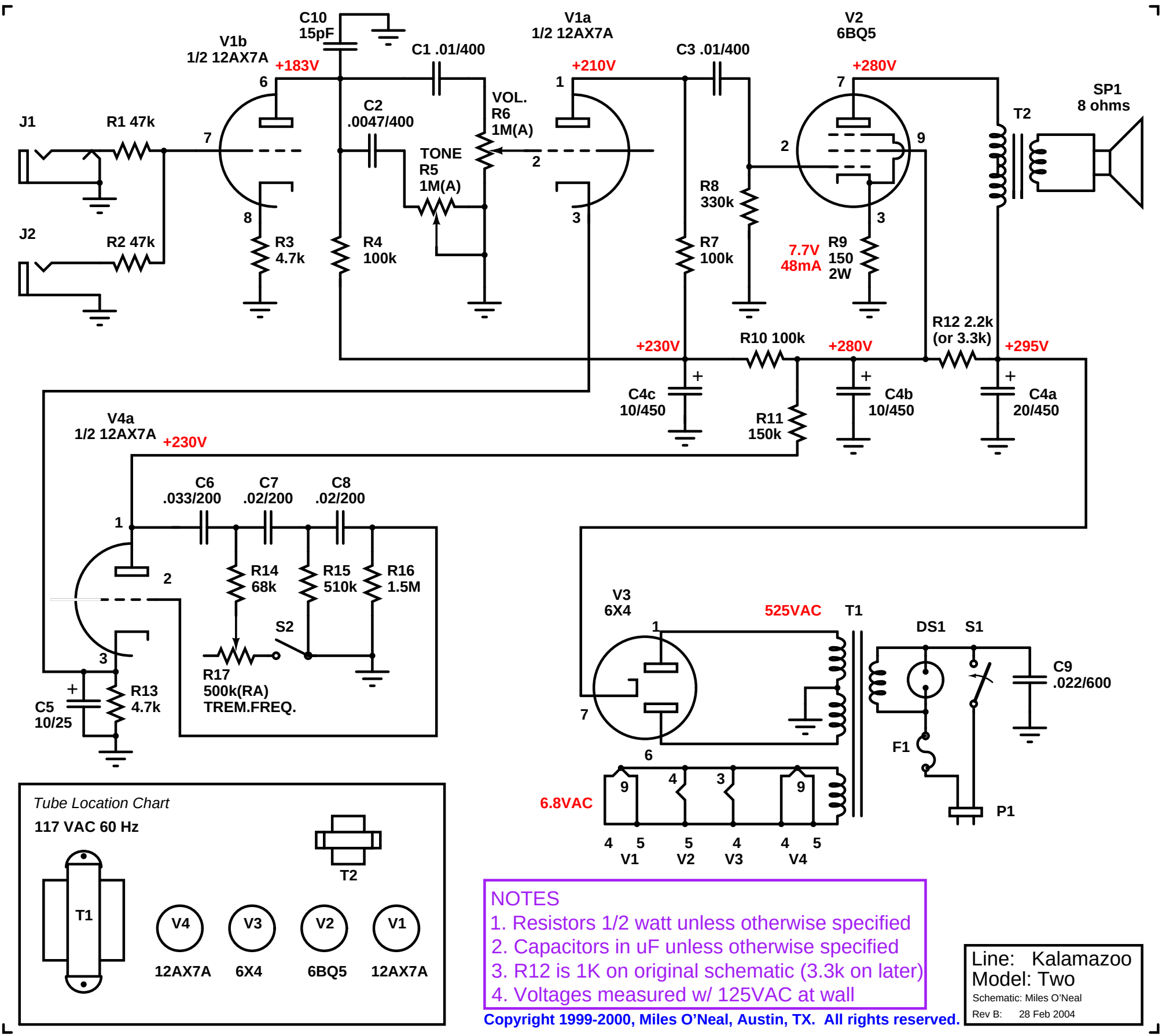

NOTES
1. Resistors 1/2 watt unless otherwise specified
2. Capacitors in uF unless otherwise specified
3. R12 is 1K on original schematic (3.3k on later)
4. Voltages measured w/ 125VAC at wall

Line: Kalamazoo
Model: Two
Schematic: Miles O'Neal
Rev B: 28 Feb 2004

Copyright 1999-2000, Miles O'Neal, Austin, TX. All rights reserved.