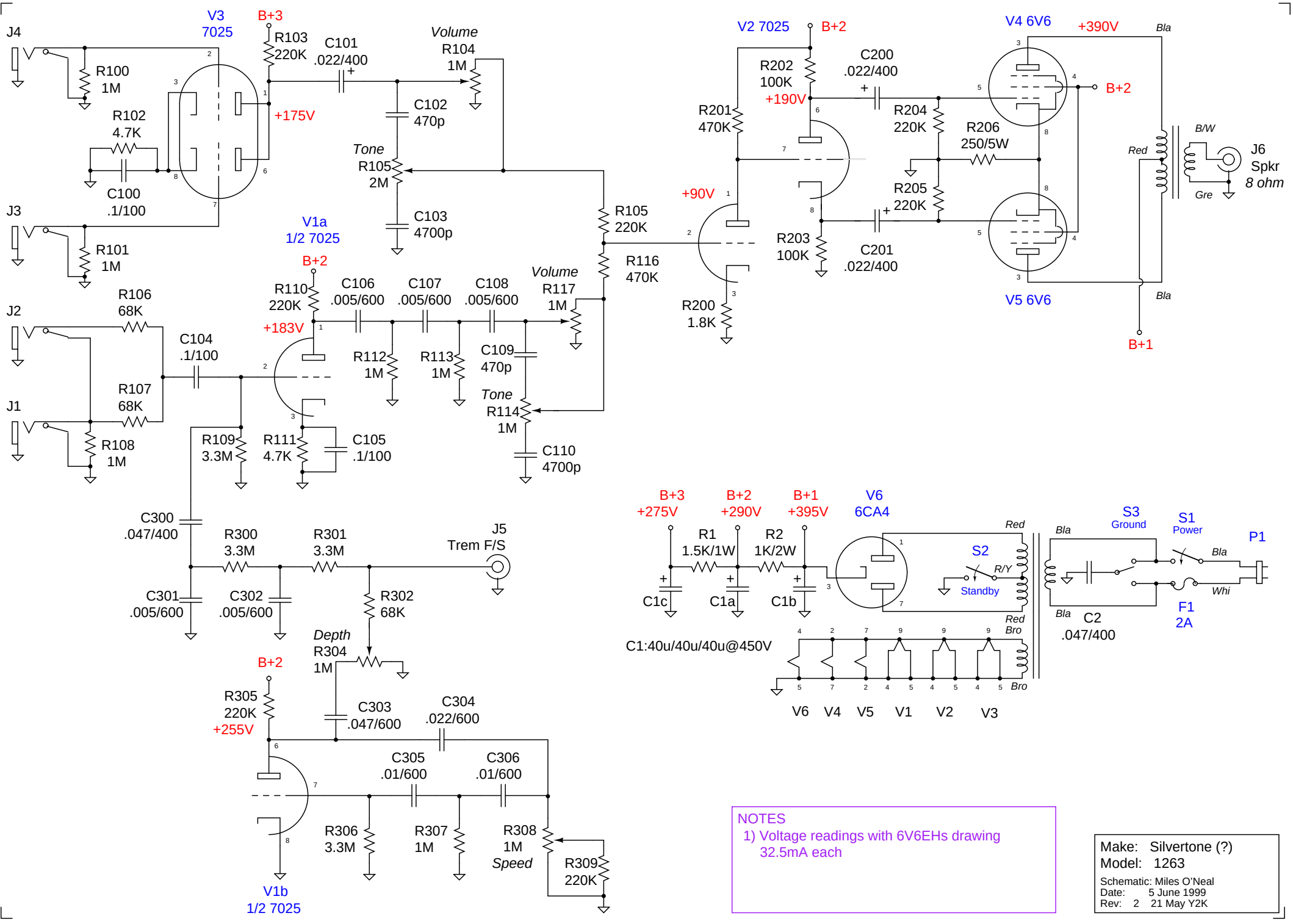

NOTES
1) Voltage readings with 6V6EHs drawing 32.5mA each

Make: Silvertone (?)
Model: 1263

Schematic: Miles O'Neal
Date: 5 June 1999
Rev: 2 21 May Y2K