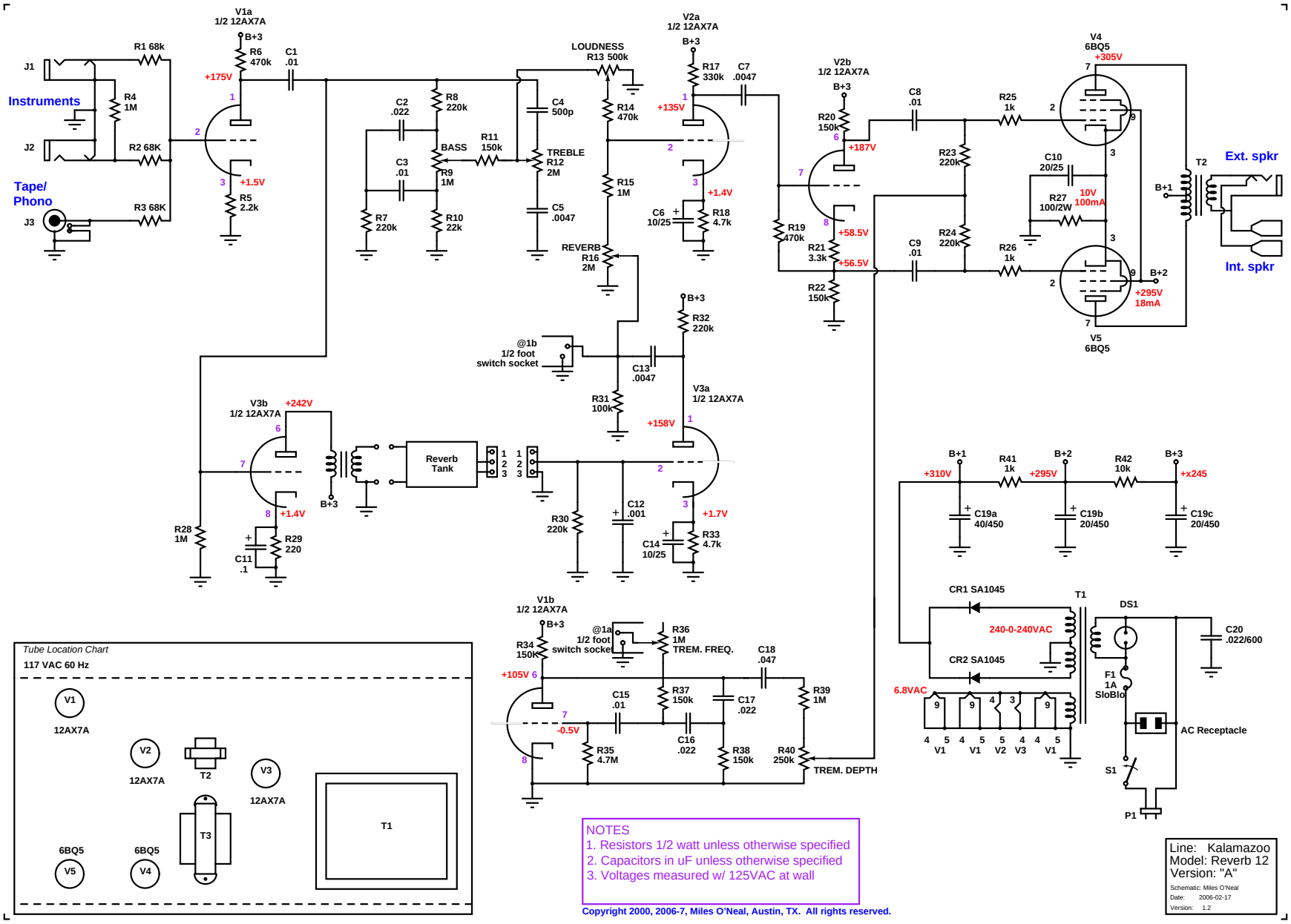

Copyright 2000, 2006-7, Miles O'Neal, Austin, TX. All rights reserved.